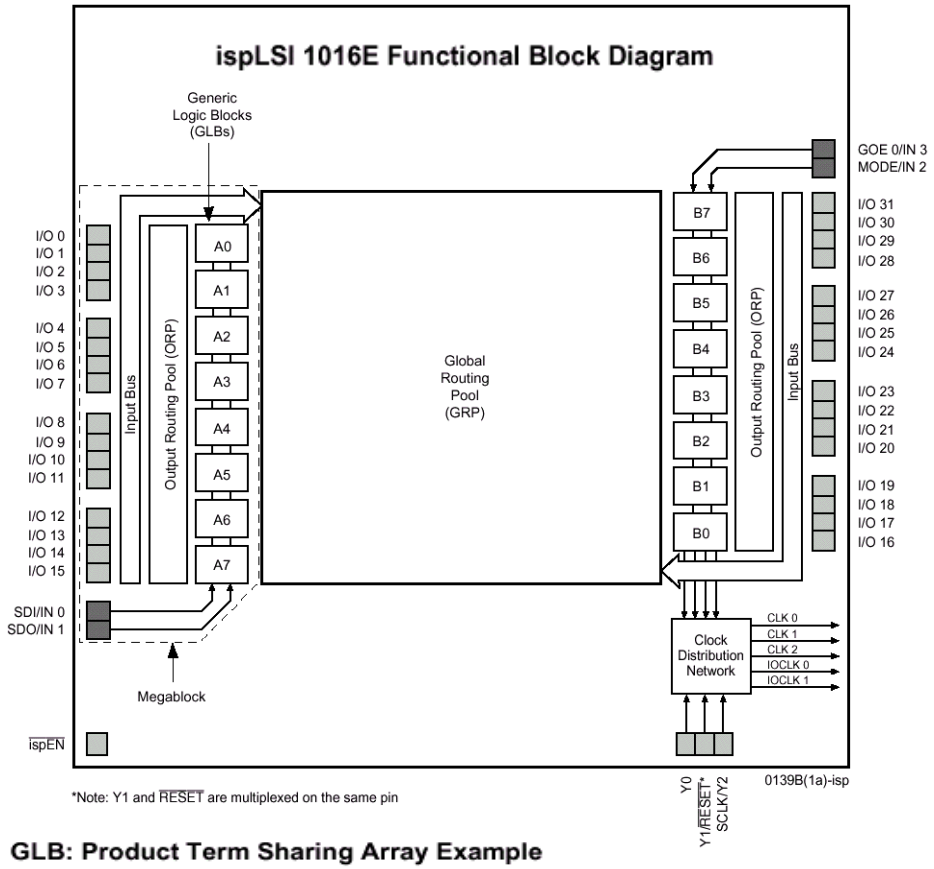

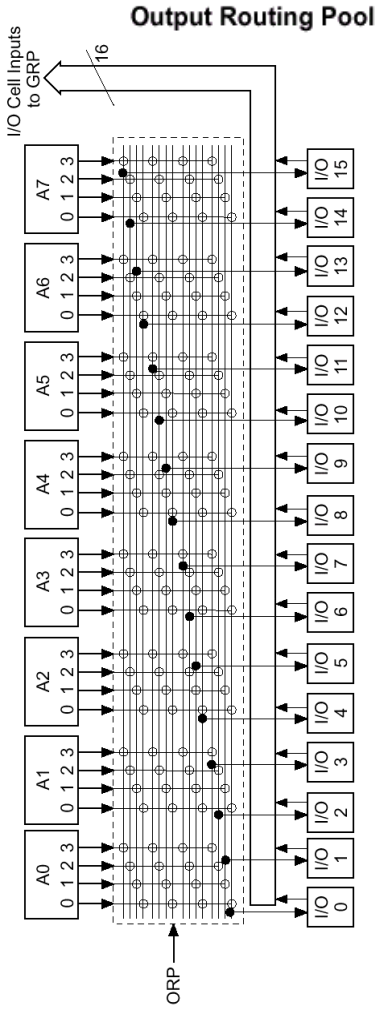

GLB: Product Term Sharing Array Example

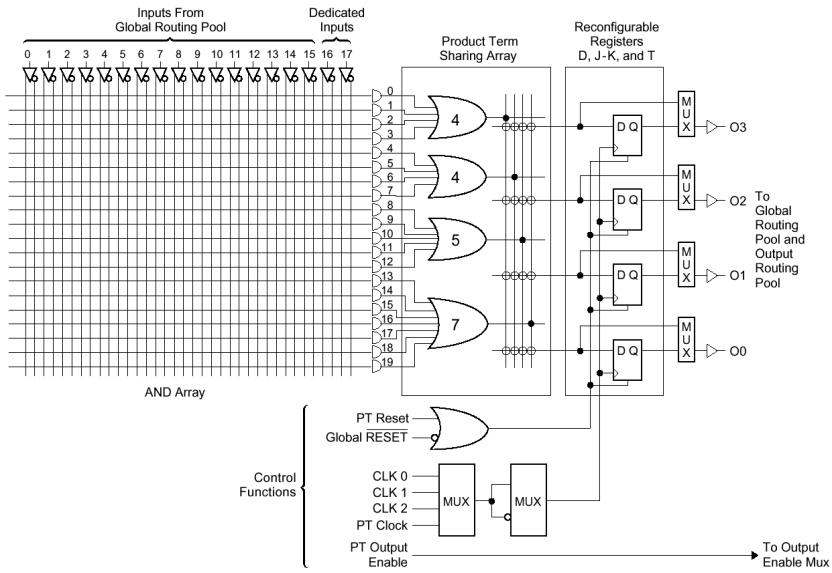

I/O Cell Architecture

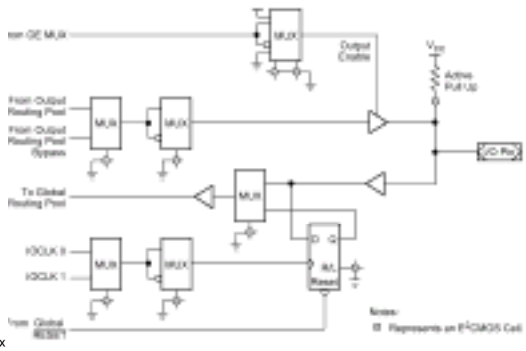

GLB: Mixed Mode Configuration Example

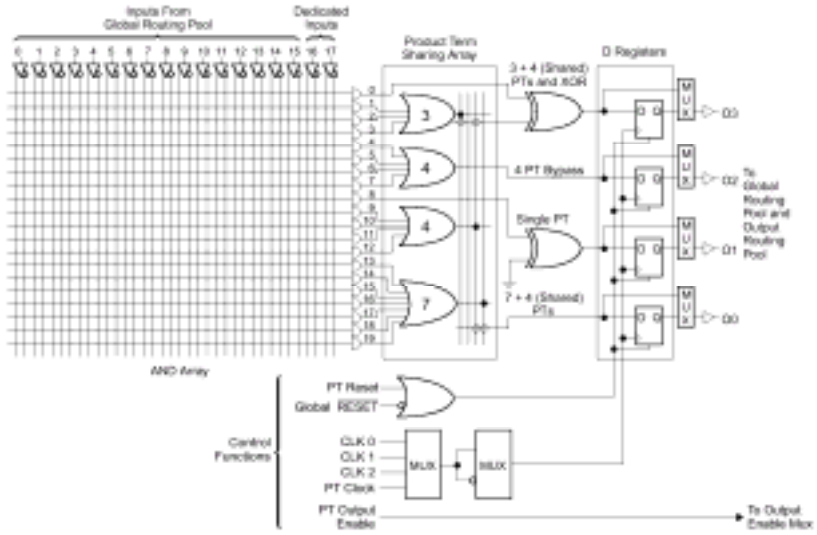
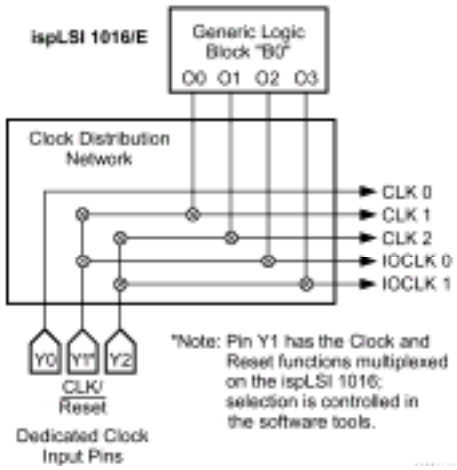
Clock Distribution Network